dCS
ONLY THE MUSIC



dCS MCD 16 Manual

dCS | V1.1 | 09/2026

Welcome

The MCD 16 is a 16-channel digital-to-analogue converter (DAC) designed for high performance multichannel audio systems. It delivers exceptional accuracy and clarity, drawing on decades of engineering expertise from dCS.

Founded in Cambridge in 1987, dCS began as a specialist in advanced signal conversion systems for organisations including Ferranti, Marconi Avionics and British Aerospace. This foundation in high precision digital engineering led to pioneering developments in digital audio, including the world's first 24-bit ADC in 1989 and the first 24-bit DAC in 1993.

This heritage in precision engineering and innovation is reflected in every dCS product. The MCD 16 continues this tradition, offering reliable, transparent and highly detailed sound reproduction for multichannel installations.

Please read this manual in full before installing or operating the MCD 16. Familiarising yourself with the system, its connections and its setup requirements will help ensure correct installation, optimal performance and long-term reliability. This is especially important for complex multichannel environments where proper configuration is essential. If you are an installer, we recommend reviewing all relevant sections prior to unpacking or installing the unit.

Copyright © 2026 Data Conversion Systems Ltd. All Rights Reserved.

Information contained in this manual is subject to change without notice, and whilst it is checked for accuracy, no liabilities can be accepted for errors.

dCS Ring DAC® is a registered trademark of Data Conversion Systems Ltd.

dCS is Data Conversion Systems Ltd. Company registered in England No. 2072115.

Contents

Welcome		2
1.	Overview	5
1.1	Product Summary	5
1.2	Key Features	5
1.3	What's Included in the Box	5
2.	Compatibility	6
2.1	Supported Sources	6
2.2	Amplifier Compatibility	6
2.3	Home Automation Support	6
3.	Hardware Overview	7
3.1	Front Panel	7
3.2	Home Screen	7
3.3	Status LED Indicator	7
3.4	Power Modes	8
3.8	Rear Panel	8
4.	Installation	9
4.1	Rack Mount Installation	9
4.2	Shelf Installation	9
4.3	Ventilation & Cooling	10
4.4	Power Connection	10
5.	Connections	11
5.1	Digital Inputs	11
	5.1.1 AES via DB25	11
	5.1.2 AES via XLR	11
5.2	Input Source Selection	11
5.3	Analogue Outputs	11
5.4	12V Trigger	11
5.5	Wordclock Inputs	11
5.6	Network Connection	11

Contents continued

6.	Initial Setup	12
6.1	Power On/Off	12
6.2	Selecting the Source	12
6.3	Changing the Output Voltage Setting	12
6.4	Verifying Signal with Channel Activity Screen	13
6.5	Basic Functional Check	13
7.	Settings Menu	14
7.1	Menu Structure	14
8.	Settings Menu	15
8.1	Adjusting Display Brightness	15
8.2	Turning the Display On or Off	15
9.	Clock Sync Modes	15
9.1	Audio Sync	15
9.2	Wordclock Sync	15
10.	Auto Standby	16
11.	Factory Reset	16
12.	Firmware Updates	17
12.1	Updating via the Web Interface	17
13.	Troubleshooting	18
13.1	No Audio	18
13.2	Missing Channels	18
13.3	Incorrect Input Source	18
14.	Maintenance & Care	19
14.1	Cleaning & Handling	19
14.2	Long Term Reliability	19
15.	Support	19
15.1	Contact Details	19
16.	Technical Reference	20
16.1	Specifications	20

1. Overview

1.1 Product Summary

The MCD 16 is a 16-channel digital-to-analogue converter. It delivers reference-grade audio quality across all channels, bringing the renowned dCS sound to modern immersive audio systems.

The system is built around eight stereo dCS Ring DAC boards, ensuring that each pair of channels meets the same strict performance standards found in dCS stereo products.

Supporting PCM audio up to 24-bit/192 kS/s, the MCD 16 offers digital inputs including 8x AES3 inputs on a DB25 connector and 8x individual AES3 inputs on individual XLR connectors, along with balanced analogue outputs on XLR and DB25 connectors for a wide variety of amplifier configurations. Housed in a 4U height rack mount compatible chassis, the unit includes network connectivity for software updates and basic IP based automation, with essential setting and system status information also available directly from the front panel.

1.2 Key Features

- 16-channel digital-to-analogue converter.
- Utilises eight dCS Ring DAC boards to maintain reference-level sound quality across all channels
- Supports PCM audio up to 24-bit / 192 kS/s
- AES3 input is available via either DB25 or XLR connections.
- Balanced analogue outputs with selectable output voltage on XLR and DB25 connectors
- 4U rack-mount chassis for 19” rack installation environments
- Network connectivity for software updates and basic IP automation support
- Front panel display for quick operation and system monitoring

1.3 What’s Included in the Box

Before installing the MCD 16, please ensure that all items listed below are present. Carefully check the unit and all accessories for completeness and for any signs of damage that may have occurred during shipping.

If any items are missing or appear damaged, please contact your authorised dCS dealer immediately. Do not proceed with installation until the issue has been resolved.

- MCD 16
- Regional power cables
- Rack ears and fittings
- Product feet and fittings
- Quick Start Guide
- Safety and Compliance guide

2. Compatibility

2.1 Supported Sources

The MCD 16 is compatible with sources that output digital audio via AES3. It features both XLR and DB25 connectors for AES inputs, with the DB25 connector being wired to the TASCAM pinout standard.

When integrating an MCD 16 with an A/V processor, ensure that the processor has the relevant outputs available. Some processors have multichannel AES3 outputs as standard, some require AES3 outputs to be specified at the time of purchase / installed as an upgrade, and some do not have any option for multichannel AES3 outputs.

2.2 Amplifier Compatibility

The MCD 16 can be connected to any power amplifier with a balanced analogue input. This includes amplifiers with discrete inputs (such as those using individual XLR connectors for the inputs), as well as those using multichannel inputs on a single connector (such as those using a DB25 connector for 8x channels of balanced audio).

When planning an installation, ensure that the amplifier(s) supports the required input format and that the appropriate cables are available. If you are unsure which option is best for the system, please consult your amplifier's documentation or contact your authorised dCS dealer for guidance.

To experience the full performance capabilities of the MCD 16, we recommend using the unit in systems that use pure analogue power amplifiers with no additional DSP processing downstream. Any further digital signal manipulation after the MCD 16 may reduce the benefits of its high precision digital to analogue conversion and compromise overall sound quality.

2.3 Home Automation Support

The dCS MCD 16 supports basic integration with popular home automation platforms, including Control4 and Crestron. These systems can be used to manage essential functions such as power state control and simple operational commands.

Further resources can be downloaded from: www.dcsaudio.com/support

Please refer to your automation system's documentation or your authorised dCS dealer if you require assistance with setup.

3. Hardware Overview

3.1 Front Panel

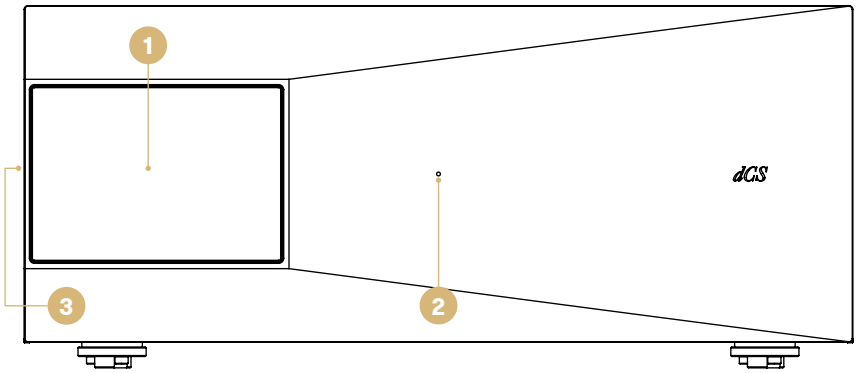

Label	Function
1	Touch display
2	Status LED
3	Power button

3.2 Home Screen

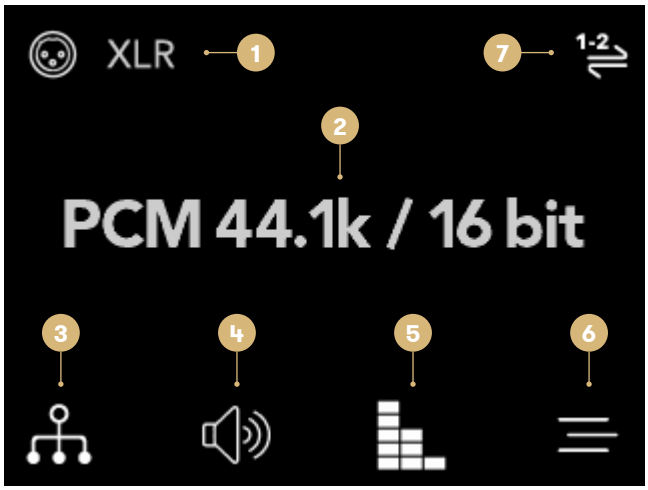

Label	Function
1	Source indication
2	Input format
3	Source selection
4	Mute / unmute
5	Channel activity screen
6	Settings Menu
7	Clocking / PLL lock

3.3 Status LED Indicator

The Status LED (2) on the MCD 16 provides a clear visual indication of the unit's current operating state. The LED will change colour or behaviour depending on the selected mode.

Status LED Behaviour

Mode	LED Colour / Behaviour
Active Mode	Bright White
Sleep Mode	Red
Standby Mode	Dim White
Thermal Shutdown	Flashing Red (On / Off)
Off	LED Off

3.4 Power Modes

Active Mode (Bright White LED)

Unit fully powered. All audio processing and system functions active.

Sleep Mode (Red LED)

Long press of the power button from active mode. Low power consumption - most internal systems inactive, audio off.

Standby Mode (Dim White LED)

Short press of the power button from active mode. Reduced power consumption with faster wake up than Sleep Mode. Some internal systems remain active, audio off.

Thermal Shutdown (Flashing Red LED)

Triggered by excessive internal temperature. Once the unit has cooled and temperatures have returned to safe levels, it will not restart automatically. You must manually wake the unit to resume normal operation.

Off (LED Off)

Rear power inlet switched off. Unit fully isolated from mains and not operational.

3.5 Rear Panel

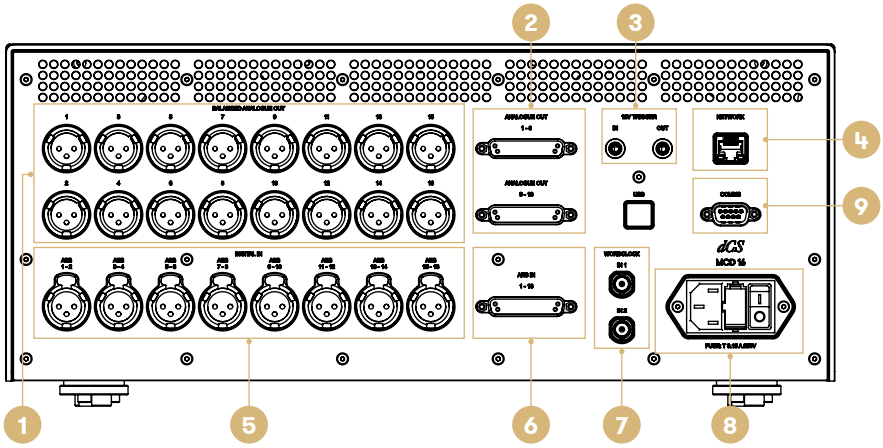

Label	Function
1	Balanced analogue outputs on 16 x XLR (Channels 1 to 16)
2	Balanced analogue outputs on 2 x DB25 (Channels 1 to 16)
3	12 V Trigger (input and output)
4	Network interface on RJ45 connector
5	Digital inputs on 8 x AES/XLR (Channels 1 to 16)
6	Digital inputs on 1 x AES/DB25 (Channels 1 to 16)
7	Wordclock In
8	Power inlet and fuse
9	RS232 interface on DB9 connector

4. Installation

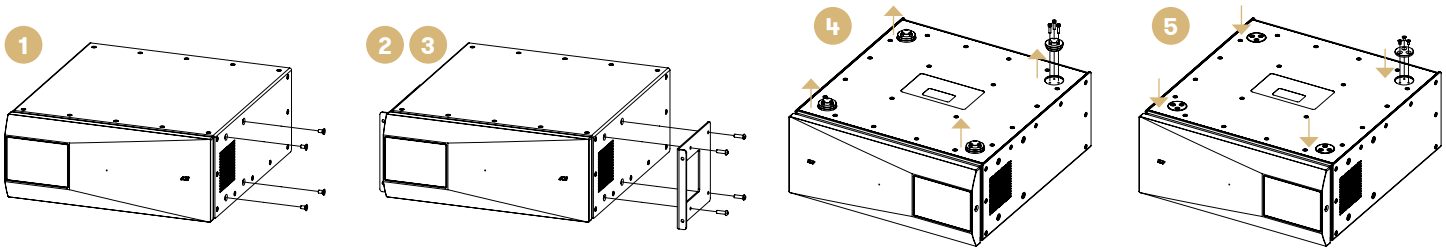

4.1 Rack Mount Installation

Please follow the installation diagram to correctly fit the rack mount ears, ensuring that the chosen rack can safely support the full weight of the MCD 16.

1. Remove the four M6 x 20 mm button head screws shown using a 4 mm hex driver. Do not use a ball-headed hex driver as these can damage the screw heads.
2. Fix the rack ear to the MCD 16 using the four M6 x 20 mm button head screws provided with the rack ears using a 4 mm hex driver.
3. Repeat the process for the installation of the other rack ear.
4. Carefully turn the MCD 16 over and remove the three M4 x 16 mm cap head screws using a 3 mm hex driver. Remove the attached foot mount, then repeat this process for each of the remaining three foot mounts.
5. Fit the foot cover and secure it using the three M4 x 8mm countersink screws using a 2.5mm driver, then repeat this process for each of the remaining three covers.

4.2 Shelf Installation

For installations outside of a 19" rack, fit the supplied feet to ensure proper support and vibration control. Please follow the installation diagram when attaching the feet and ensure that the shelf can safely accommodate the weight of the MCD 16.

1. Screw the foot clockwise onto the foot mount until fully tightened.
2. Repeat the process for the installation of the other three feet.

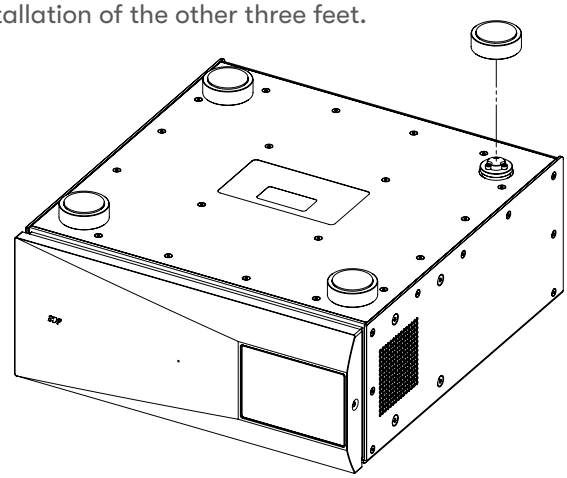

4.3 Ventilation & Cooling

To ensure reliable operation and long term performance, the MCD 16 must be installed in a well ventilated environment. The unit contains its own internal cooling fans, so it is essential that none of the air vents are blocked or obstructed. Adequate airflow must be maintained around the chassis, especially when installed in equipment racks or enclosed spaces.

The internal fans will automatically adjust their speed as the unit warms up. This behaviour is normal and ensures stable operating temperatures during extended use.

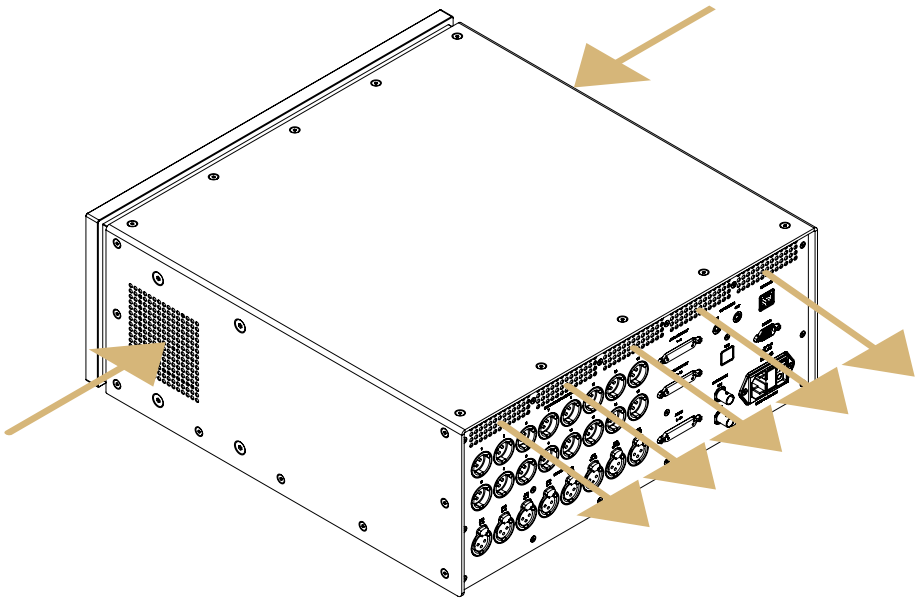

4.4 Power Connection

- Insert the supplied IEC mains cable firmly into the IEC power inlet of the MCD 16.
- Connect the other end of the cable to a properly grounded AC mains outlet.
- Use only the regional power cable supplied with the unit.
- Ensure all installation steps are complete before switching on the MCD 16.

5. Connections

5.1 Digital Inputs

The MCD 16 receives multichannel digital audio using standard AES3 formats. These inputs support PCM audio up to 24 bit / 192 kS/s.

5.1.1 AES via DB25

The DB25 AES input receives 16 channels of digital audio. The interface should be used with a DB25 connector wired to the TASCAM pinout arrangement. The cable should have an impedance of 110 Ω.

5.1.2 AES via XLR

The AES3 inputs on XLR connectors each carry 2 channels of audio. The cables used with this interface should have an impedance of 110 Ω.

5.2 Input Source Selection

After connecting the digital cables, select the appropriate input (DB25 or XLR) on the MCD 16 via the front panel display or compatible automation systems. Ensure your source device is configured to output digital audio via AES via whichever output is connected to the MCD 16 before selecting the input on the MCD 16.

5.3 Analogue Outputs

The MCD 16 provides 16 balanced analogue outputs for connection to power amplifiers. All outputs maintain the full performance of the dCS Ring DAC and deliver low noise, high precision analogue audio to the connected power amplifiers.

The XLR outputs carry balanced audio. The DB25 outputs each carry 8 channels of balanced audio, with the DB25 connectors wired to the TASCAM Analogue pinout standard. The output voltage can be set in the unit's menu to match amplifier sensitivity. Both sets of outputs (XLR and DB25) are active all the time.

Make sure not to use the same channel output on both XLR and DB25 simultaneously, as this will negatively impact performance.

5.4 12 V Trigger

The MCD 16 includes 12 V Trigger In and Trigger Out connections for synchronised power control with your processor, amplifiers, or automation system, for example. Trigger control allows the MCD 16 to turn on or enter standby automatically as part of a wider system.

5.5 Wordclock Inputs

The MCD 16 includes 2 Wordclock inputs to receive a stable timing reference from other audio devices. This ensures all connected equipment remains synchronised, reducing jitter and improving performance in larger or centrally clocked systems. See Section 9 for further information.

5.6 Network Connection

The MCD 16 includes an Ethernet port used for home automation integration, accessing the web interface and performing firmware updates. It does not carry audio or media data. Connecting the unit to a network allows management of system status and firmware updates.

5.7 RS232 Interface

The MCD 16 includes an RS232 interface on a DB9 connector. This interface can be used to control the unit with home automation integration.

6. Initial Setup

6.1 Power On/Off

- Ensure all power, input and output connections are securely in place.
- Verify that the installation environment is well ventilated and that no air vents on the MCD 16 are obstructed.
- Turn the power rocker switch on the rear of the unit to the on position.
- Allow the unit to complete its startup sequence before selecting inputs or beginning system checks.
- To put MCD 16 into standby mode press and release the power button on the side of the unit.
- To turn MCD 16 into sleep mode press and hold the power button on the side of the unit.
- To wake MCD 16 from standby or sleep mode press and release the power button on the side of the unit.

6.2 Selecting the Source

The MCD 16 source can be changed between **DB25** and **XLR**, depending on which AES input connection is being used. Press the **Source** selection button on the front panel to toggle between the available source options.

The selected source is shown in the top left hand side of the Home screen, allowing you to confirm whether **DB25** or **XLR** is currently active.

- Press the **Source** selection button on the front panel to toggle between **DB25** and **XLR**.
- Check the top left-hand side of the Home screen to confirm that the required source is selected.
- Alternatively, select the source via **Menu → Source**
- The source can also be selected via a compatible home automation system.

6.3 Changing the Output Voltage Setting

The MCD 16 features adjustable analogue output voltage so it can be matched to the input sensitivity of the connected power amplifiers or downstream equipment. Setting the correct output voltage ensures optimal system gain structure and prevents overload or noise issues. The output voltage can be set to either 2 V or 6 V RMS.

To change the output voltage:

- Navigate to the **Menu → Device Settings → Output Voltage**
- Select the desired output level (**2 V** or **6 V**, depending on system requirements).
- Ensure your amplifiers or processors are configured appropriately for the chosen output voltage before unmuting or playing audio.

If unsure which setting is correct for your system, consult the amplifier's documentation or contact your authorised dCS dealer for guidance.

6.4 Verifying Signal with Channel Activity Screen

The Channel Activity screen allows you to confirm which input channels are active and which are receiving audio data. When a valid AES signal is present, the corresponding channels will display real time activity indicators, helping you quickly verify input routing, signal presence and PLL locking. Use this screen during installation or troubleshooting to ensure that all connected channels are operating as expected.

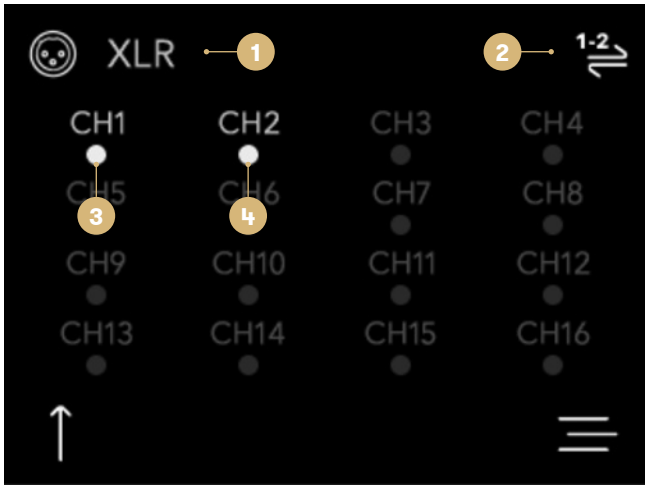

Label	Function	Indication
1	Source	XLR / DB25
2	Clock Source (PLL Lock)	Audio Sync / Wordclock Sync
3	Channel Connection	White = connected; Grey = not connected
4	Channel Activity	White = signal; Grey = no signal

6.5 Basic Functional Check

- Before beginning any checks, mute the system volume on your source device or control system.
- Ensure the output voltage of the MCD 16 is set correctly for the connected amplifier. Refer to *Changing the Output Voltage Setting* (6.3) within this User Guide.
- Verify that the Status LED indicates the expected power state.
- Confirm that the connected source device is outputting a valid digital signal.
- Open the Channel Activity screen to ensure all expected channels show activity when audio is playing.
- Check that analogue outputs are feeding the correct amplifier channels.
- After completing these checks, gradually increase the system volume and confirm that audio is heard through the correct channels.

7. Settings Menu

7.1 Menu Structure

Source		DB-25 	XLR 
Device Settings 	**Line Output** **2V**	2V **2V**	6V **6V**
	Brightness 	0 - 14 	
	Display 	On 	Off 
	Sync Mode 	W Auto 	Audio 
	Auto Standby 	On 	Off 
	Factory Reset 		
Information 	Unit Status 		
	Port Status 		
	Version **V**		

8. Display Settings

The front panel display can be configured from the Device Settings menu. Use these options to adjust the display brightness or to turn the display on or off to suit the installation environment.

8.1 Adjusting Display Brightness

- **Menu → Device Settings → Brightness**
- Adjust the brightness to the required level.

8.2 Turning the Display On or Off

- **Menu → Device Settings → Display**
- Select **Off** to turn the display off.
- When the display is off, touching the screen turns it back on for a short time so that the unit can still be operated.
- Select **On** to turn the display back on permanently

9. Clock Sync Modes

There are two sync modes available on the MCD 16. This setting determines what clocking source the MCD 16 uses to synchronise its internal clocking to. It is necessary to set this setting correctly to ensure no synchronisation issues occur, which can cause glitches, pops or dropouts in the audio.

- **Menu → Device Settings → Sync Mode**
- Select either **Audio Sync** or **Wordclock** Sync

9.1 Audio Sync

Audio Sync is the default Sync Mode setting for the MCD 16. In this mode, the unit will synchronise to the incoming AES signal. This mode should be used if there is no Master Clock in the system which is supplying a compatible Wordclock signal to both the MCD 16 and the source device.

9.2 Wordclock Sync

Wordclock Sync is used when the MCD 16 is connected to an external Master Clock via the two available Wordclock In ports on BNC connectors. These ports accept Wordclock signals at TTL levels, with compatible frequencies between 44.1 kHz and 192 kHz.

When Wordclock Sync is selected, the MCD 16 will look to both of the Wordclock In ports for a valid Wordclock signal at a frequency that is synchronous with the currently playing audio. If no appropriate Wordclock signal is present when Wordclock Sync is selected, the MCD 16 will revert to Audio Sync.

It is crucial to ensure that if a Master Clock is being used with the MCD 16, the source device must also be locked to the same Master Clock. If this is not done, there may be glitches, pops or dropouts in the audio caused by mismatched clock domains. Note that most AV processors cannot be locked to external clocks.

10. Auto Standby

The MCD 16 includes an Auto Standby feature, enabled by default. If the unit does not have any active input connections and is left inactive for 20 minutes, it will automatically enter Standby Mode to reduce power consumption.

This can be disabled or enabled by navigating to:

- **Menu → Device Settings → Auto Standby**

Please note that turning Auto Standby off will increase overall power consumption, as the unit will remain fully active unless manually placed into Standby or Sleep Mode.

11. Factory Reset

A factory reset restores the MCD 16 to its default configuration. Use this option if you need to clear the current user settings before reinstalling, reconfiguring, or troubleshooting the unit.

To perform a factory reset:

- **Menu → Device Settings → Factory Reset**
- Follow the on-screen prompt to confirm the reset.

NOTE: Performing a factory reset will restore user-configurable settings to their default values. Review the unit configuration after the reset and reapply any required installation settings before use.

12. Firmware Updates

The MCD 16 supports firmware updates initiated through the web interface. Keeping the unit up to date ensures optimal performance, access to new features and ongoing system stability.

12.1 Updating via the Web Interface

- Ensure the MCD 16 is connected to the network.
- Locate the unit's IP address via the unit's front panel in the **Information → Unit Status** menu.
- Enter this IP address into a web browser on a device on the same network.
- The MCD 16 web interface will open, enabling checking for and installing available software updates.
- If an update is found, confirm to begin the installation process.
- Do not power off the unit or disconnect the network during the update.

13. Troubleshooting

13.1 No Audio

- Ensure the system volume on the source device is unmuted.
- Confirm that the correct input source (DB25 or XLR) is selected on the MCD 16.
- Verify that the source is outputting a valid digital signal via AES.
- Check all digital and analogue cables for secure connections.
- Ensure the Output Voltage is set correctly for the connected amplifier.
- Inspect the Status LED to confirm the unit is in the correct power state (Active).

13.2 Missing Channels

- Check that all AES digital cables are correctly connected and properly seated.
- Verify that the source device is outputting all intended channels over AES.
- Use the Channel Activity screen to confirm which channels are receiving signal.
- Ensure the correct DB25 or XLR input is selected for the installation.
- Confirm that analogue outputs are routed to the correct amplifier channels.
- If using DB25 cables, inspect the cables to ensure they match the required TASCAM pinout standard.

13.3 Incorrect Input Source

- Confirm which digital input (DB25 or XLR) is being used in the installation.
- Ensure the MCD 16 input selection matches the connected source device's output format.
- Verify that the source device is configured to output AES via the selected interface.
- Check the front panel display to ensure the selected input is active and receiving signal.

14. Maintenance & Care

14.1 Cleaning & Handling

- Always power off the MCD 16 and disconnect it from the mains supply before cleaning.
- Use a soft, dry, lint-free cloth to wipe the exterior surfaces.
- For more persistent marks, slightly dampen the cloth with water only. Do not use solvents, alcohol-based cleaners, sprays, or abrasive materials, as these may damage the finish.
- Avoid touching the connectors unnecessarily to prevent contamination of contact surfaces.
- Ensure that ventilation openings remain free from dust buildup and obstructions to maintain proper airflow.

14.2 Long Term Reliability

- Install the MCD 16 in a clean, well-ventilated environment to ensure stable operating temperatures and consistent long term performance.
- Do not block air vents or obstruct airflow around the unit, as heat buildup may reduce operational lifespan.
- Keep all cables securely seated and replace any damaged cables immediately to protect the signal path and connected equipment.
- Keep the unit's firmware up to date to ensure continued stability and compatibility with system components.
- If the unit is unused for an extended period, disconnect it from the mains and protect it from dust and moisture.
- For any service or repair needs, contact your authorised dCS dealer. The MCD 16 contains no user serviceable internal components.

15. Support

15.1 Contact Details

For product assistance, service enquiries, or technical support, please contact:

dCS Audio
Data Conversion Systems Ltd
Unit 1, Buckingway Business Park
Swavesey, Cambridgeshire
CB24 4AE, United Kingdom

Telephone: **+44 (0)1954 233950**
Website: **www.dcsaudio.com**
Email: **info@dcsaudio.com**
Support: **support@dcsaudio.com**

If contacting dCS for technical support, please provide your unit's serial number, firmware version and system configuration details (available from **Menu → Information**) to help expedite assistance.

16. Technical Reference

16.1 Specifications

Converter type	dCS proprietary Ring DAC topology
Sample rates Compatible	PCM rates are up to 24 bits at 44.1, 48, 88.2, 96, 176.4 and 192 kS/s
Digital inputs	8x AES (XLR) providing 16 channels
	1x AES (DB25) providing 16 channels
Control	Network interface on RJ45 connector
	RS232 interface on DB9 connector
	12 V trigger (input and output
Clocking	2x word clock input on 2x BNC connector
	Accept standard word clocks at 44.1, 48, 88.2, 96, 176.4 or 192 kHz.
	The data rate can be the same as the clock rate or an exact multiple (0.25x, 0.5x, 1x, 2x, 4x, 8x) of the clock rate
Output levels	2 V, or 6 V rms for a full-scale input, set in the menu
Latency	44.1 kS/s = 1.70 ms, 48 kS/s = 1.56 ms
Product dimensions	178 mm (H) x 438 mm (W) x 482 mm (D)
Product weight	25 kg
Power Requirements	Input voltage: 100-120 V / 220-240 V AC
	Supply frequency: 50/60 Hz (global mains compatibility)
	Fuse rating: T 3.15 A, 250 V
Power Consumption	Typical (all channels active) 100 W
	Standby mode < 2.00 W
	Sleep mode < 0.5 W
	Off mode < 0 W (power isolated)
Environmental Conditions	Operating ambient temperature: 0°C to 40°C; Humidity: non-condensing

dCS MCD 16
Manual

dcsaudio.com | **@dCSonlythemusic** | **info@dcsaudio.com**

Data Conversion Systems Ltd.
Unit 1, Buckingway Business Park, Anderson Road,
Swavesey, Cambridge, CB24 4AE, UK