MCD 16
Quick Start Guide

Thank you for choosing the MCD 16. This Quick Start Guide provides the essential information you need to set up and begin using your unit quickly and confidently. For more detailed instructions, advanced features, and full operational guidance, the complete user manual is available to download at **www.dcsaudio.com/product/MCD16/documentation/user-guide**

Front panel

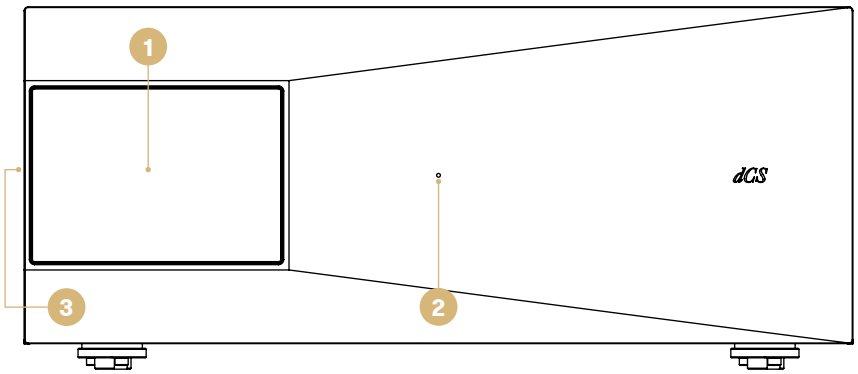

Label	Function
1	Touch display
2	Status LED
3	Power button

Rear panel

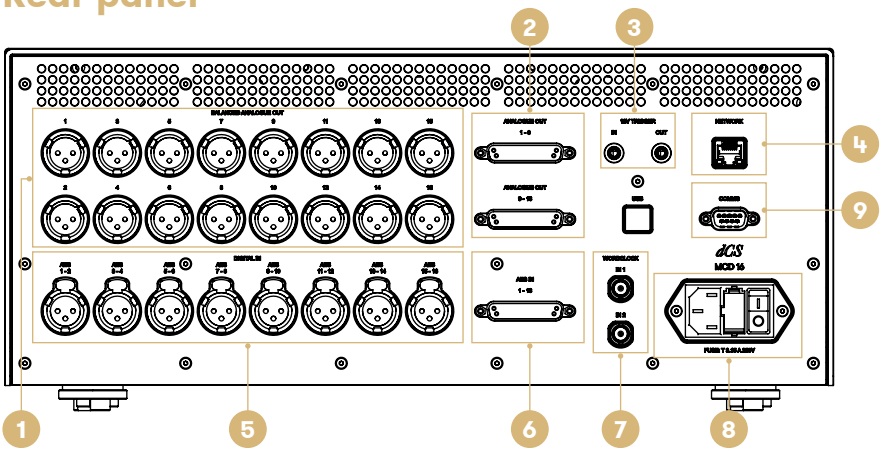

Label	Function
1	Balanced analogue outputs on 16 x XLR (Channels 1 to 16)
2	Balanced analogue outputs on 2 x DB25 (Channels 1 to 16)
3	12 V Trigger (input and output)
4	Network interface on RJ45 connector
5	Digital Input on 8 x AES/XLR (Channels 1 to 16)
6	Digital Input on 1 x AES/DB25 (Channels 1 to 16)
7	Wordclock In
8	Power inlet and fuse
9	RS232 interface on DB9 connector

Status LED Indicator

The Status LED on the MCD 16 provides a clear visual indication of the unit's current operating state.

The LED will change colour or behaviour depending on the selected mode.

Mode	LED Colour / Behaviour
Active Mode	Bright White
Sleep Mode	Red
Standby Mode	Dim White
Thermal Shutdown	Flashing Red (On / Off)

Home Screen

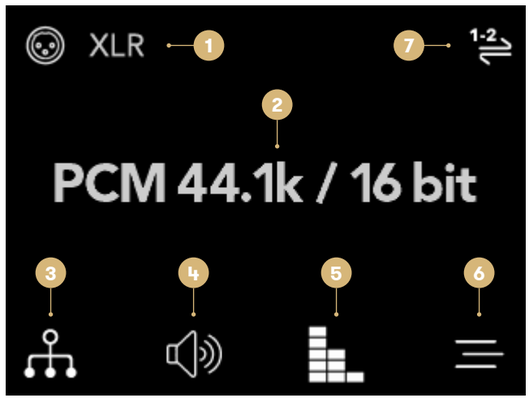

Label	Function
1	Source indication
2	Input format
3	Source selection
4	Mute / unmute
5	Channel activity screen
6	Settings menu
7	Clocking / PLL lock

Rack Mount Installation

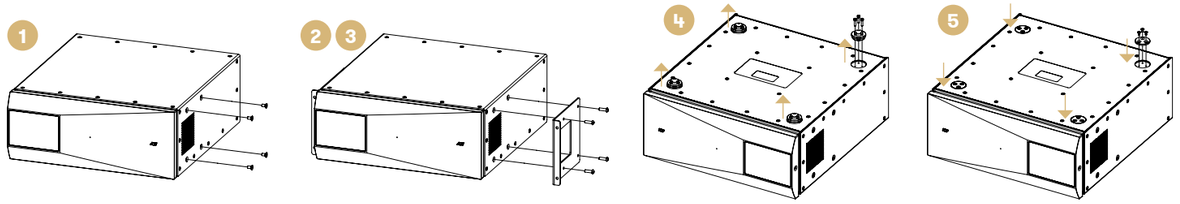

Please follow the installation diagram to correctly fit the rack mount ears, ensuring that the chosen rack can safely support the full weight of the MCD 16.

1. Remove the four M6 x 20 mm countersink screws shown using a 4 mm hex driver. Do not use a ball-headed hex driver as these can damage the screw heads.
2. Fix the rack ear to the MCD 16 using the four M6 x 20 mm button head screws provided with the rack ears using a 4 mm hex driver.
3. Repeat the process for the installation of the other rack ear.
4. Carefully turn the MCD 16 over and remove the three M4 x 16 mm cap head screws using a 3 mm hex driver. Remove the attached foot mount, then repeat this process for each of the remaining three foot mounts.
5. Fit the foot cover and secure it using the three M4 x 8mm countersink screws using a 2.5mm driver, then repeat this process for each of the remaining three covers.

Shelf Installation

For installations outside of a 19" rack, fit the supplied feet to ensure proper support and vibration control. Please follow the installation diagram when attaching the feet and ensure that the shelf can safely accommodate the weight of the MCD 16.

1. Screw the foot clockwise onto the foot mount until fully tightened.
2. Repeat the process for the installation of the other three feet.

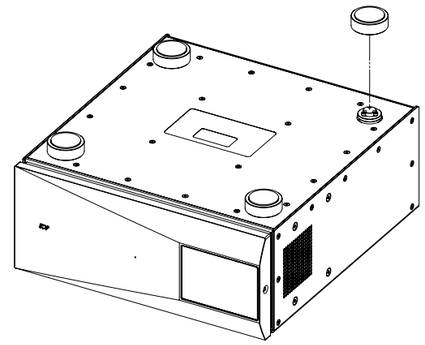

Power On/Off

- Make sure all cables are connected properly and the unit has good ventilation.
- Switch the rear power rocker to on, the MCD 16 will complete its start up sequence.
- Press and release the power button to enter Standby mode.
- Press and hold the power button to enter Sleep mode.
- Press and release the power button to wake from Standby or Sleep mode.

Changing the Output Voltage Setting

- Output level can be set to 2 V or 6 V.
- Change it via Menu → Device Settings → Line Output
- Choose the level that matches your amplifier's input sensitivity.
- Make sure downstream equipment is set correctly before unmuting audio.
- If unsure, check your amplifier manual or ask your dCS dealer.

Basic Functional Check

- Mute system volume.
- Ensure output voltage is correctly set.
- Check Status LED state.
- Confirm source is sending a valid digital signal.
- Open Channel Activity to verify all channels are active.
- Confirm analogue outputs feed the correct amplifiers.
- Slowly raise volume and confirm audio on correct channels.

Settings Menu

Source		DB-25	XLR
Device Settings	**Line Output**	2V	6V
	2V	**2V**	**6V**
	Brightness	0 - 14	
	Display	On	Off
	Sync Mode	W Auto	Audio
	Auto Standby	On	Off
	Factory Reset		
Information	Unit Status		
	Port Status		
	Version		
	V		

dcsaudio.com | **@dCSonlythemusic** | **info@dcsaudio.com**

Data Conversion Systems Ltd.
Unit 1, Buckingway Business Park, Anderson Road,
Swavesey, Cambridge, CB24 4AE, UK